Micro zoom recessed

recessed

5273, 5274, 5275, 5276, 5277, 5278

2W

BENEITO FAURE®
passion for led light

Instrucciones de montaje/ Assembly instructions/ Instructions de montage/ Montageanleitung/ Istruzioni di montaggio

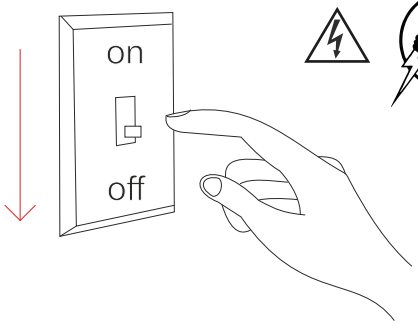

Danger !
220/240 VAC

Qualified
Electrician

1.0

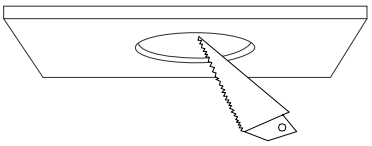

Ø 17mm

2.0

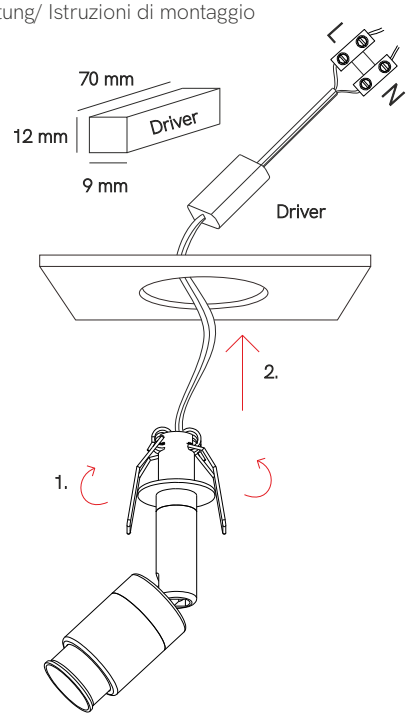

3.0

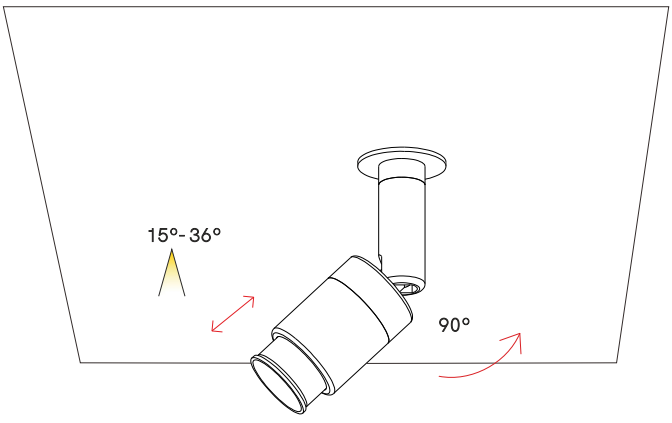

350º

4.0

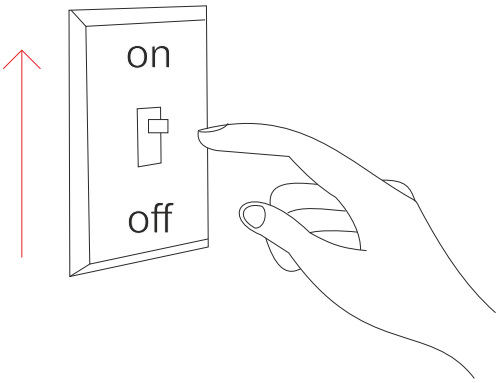

5.0

CE RoHS G 3 YEARS WARRANTY 35.000 HOURS >0,5 PF CRI ≥90 UGR <19 IP 20 220/240 VAC 15º-36º +40°C -20°C 50/60 Hz

Políg. Valldoriolf C/Thomas Edison 4-6 08430 La Roca del Vallés (Barcelona) Spain Tel.: 00 34 93.568.40.45 www.beneito-faure.com B-63378673 WEEE DE98004440