Lonja 3PH
three phase track

3X9X11, 3X9X12, 3X9X41, 3X9X42,

22W

BENEITO FAURE®
passion for led light

Instrucciones de montaje/ Assembly instructions/ Instructions de montage/ Montageanleitung/ Istruzioni di montaggio

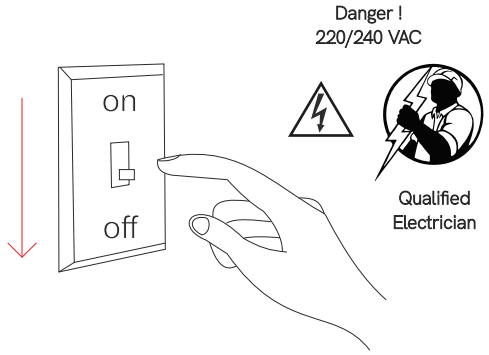

1.0

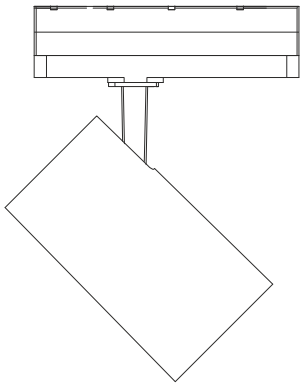

2.0

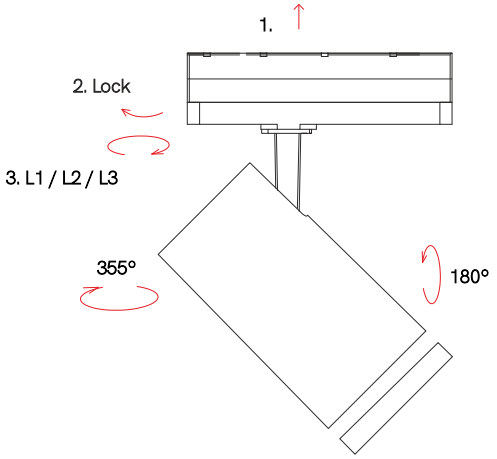

3.0

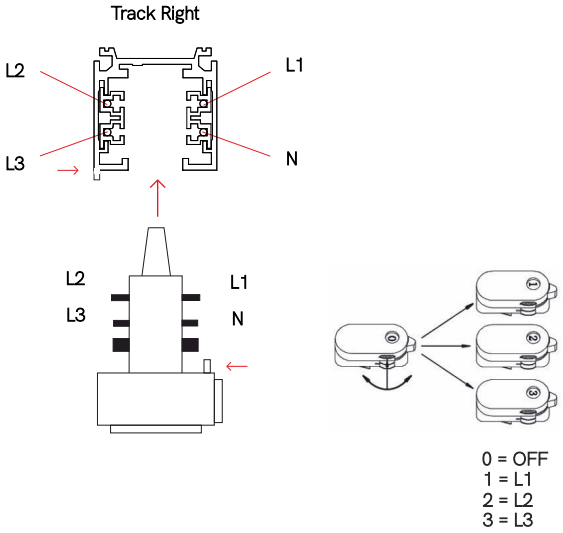

4.0

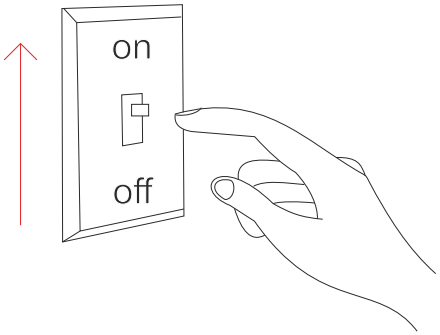

5.0

CE RoHS >0,9 PF CRI ≥90 15° 24° 36° TRIAC DIMM 5 YEARS WARRANTY 220/240 VAC 50/60 Hz +40°C -15°C 40 IP 50.000 HOURS

Políg. Valldoriolf C/Thomas Edison 4-6 08430 La Roca del Vallés (Barcelona) Spain Tel.: 00 34 93.568.40.45 www.beneito-faure.com B-63378673 WEEE DE98004440