Train

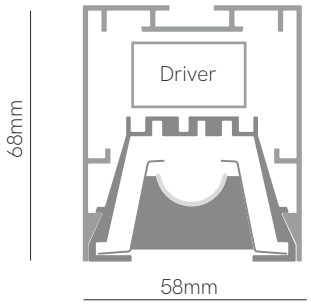

*Finished luminaire. Includes suspension kit, power cable and end caps.

Technical Information

Version	Train
Power	46W / 57W / 69W / 80W
Installation	Pendant
Material	Aluminium
Finishes	White (9003) / Black (9005)

Equipment

Ø60x28mm

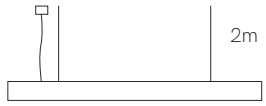

Code		Diffuser (Angle)		Power (Size)		CCT (Lm/W)		Driver		Colour	
Code	6	Black Slats (62°)	2	46W (1.130mm)	3	2.700K (112 lm/W)	2	On / Off	1	White	1
		Alum. Slats (84°)	7	57W (1.410mm)	4	3.000K (128 lm/W)	3	Dali	2	Black	2
				69W (1.690mm)	5	4.000K (136 lm/W)	4	Push	3		
				80W (1.970mm)	6	5.000K (136 lm/W)	5	Casambi	5		

Code: 6

CE RoHS

*Create your code acording to your preferences.

5 YEARS WARRANTY | 50.000 HOURS | IP 40 | UGR <19 | 230 VAC | PF >0,9 | CRI ≥95 | 3,37m Max | PUSH | DALI 2