Tura 30 12W

outdoor lighting

BENEITO FAURE®
passion for led light

4849 / 4850 / 4851 /4852 / 4853 / 4854

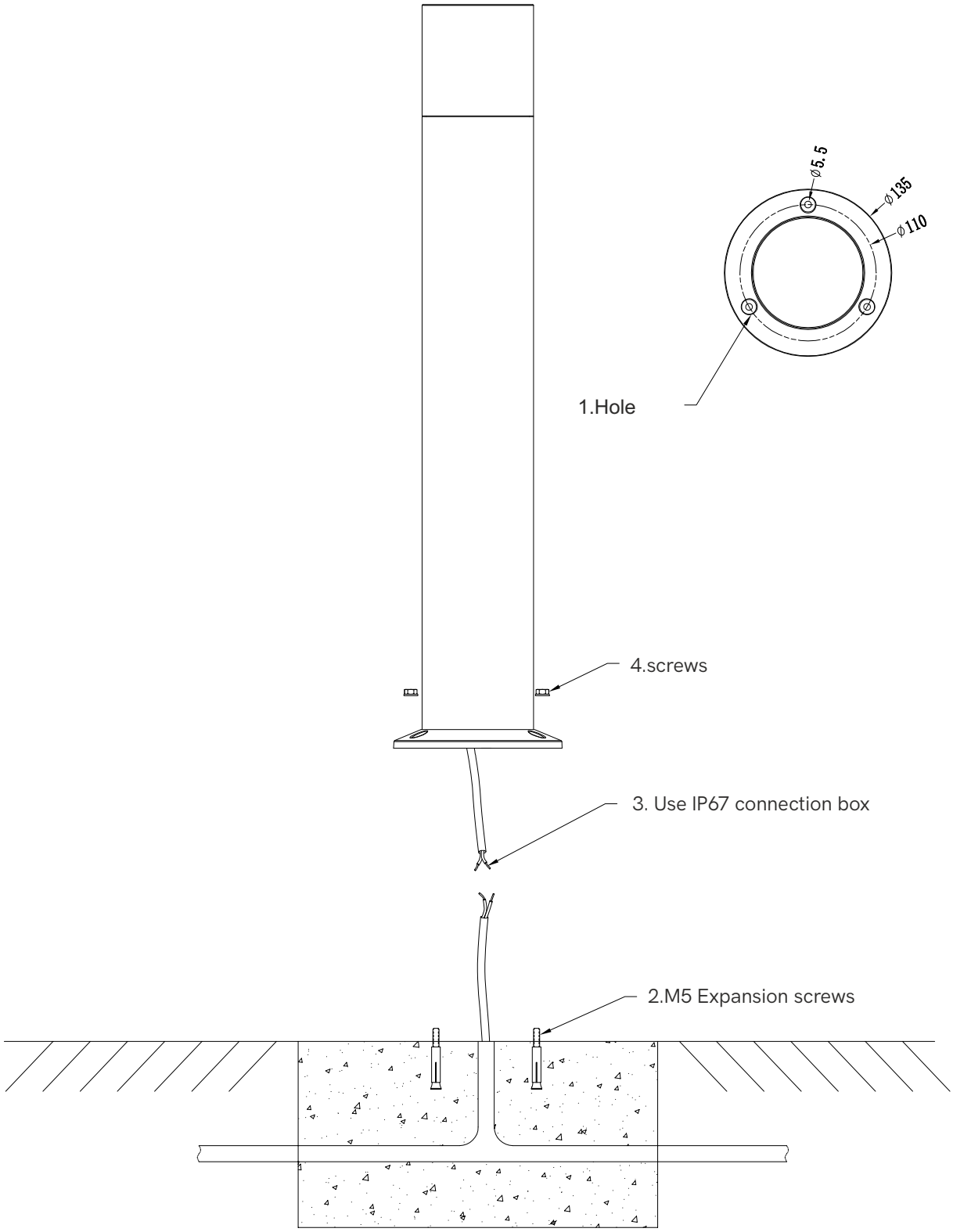

30.000 HOURS | 220/240 VAC | >0,9 PF | ≥80 CRI | 180°

3 YEARS WARRANTY | 65 IP | 50/60 Hz | IK06 | 3.000K 950 Lm | 4.000K 960 Lm

Energy efficiency class for light source is Class F.

Políg. Valldoriolf C/Thomas Edison 4-6
08430 La Roca del Vallés (Barcelona) Spain
Tel.: 00 34 93.568.40.45 www.beneito-faure.com
B-63378673 Made in P.R.C. WEEE DE98004440

CE RoHS