BENEITO FAURE®
passion for led light

LEK 6,8W LED ALUMINIUM 200-240V 10º-120º

COD. 3983, 3984,3985,3986,3987,3988, 4303, 4304, 4312

1A

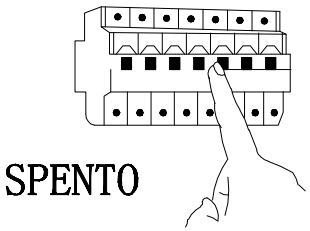

1B

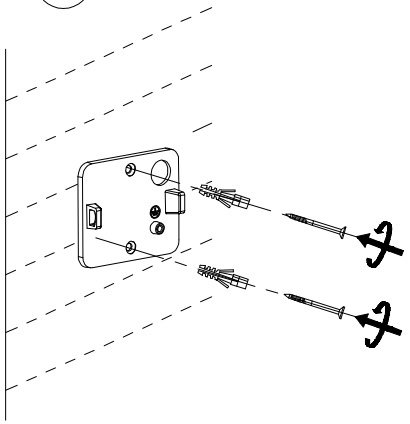

2

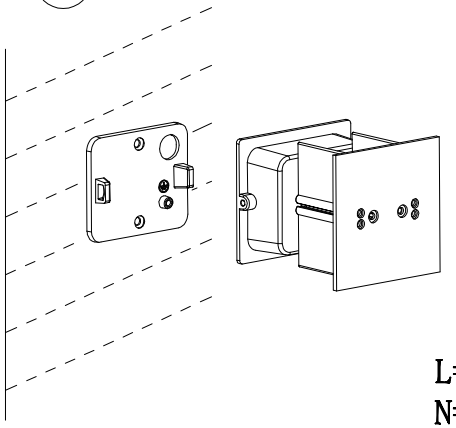

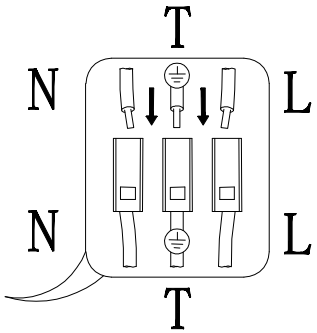

L=Linea_Cavo marrone
N=Neutro_Cavo blu
T=Terra Cavo giallo_verde

3

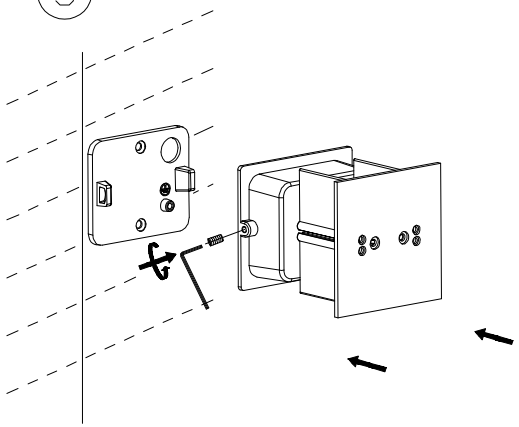

4

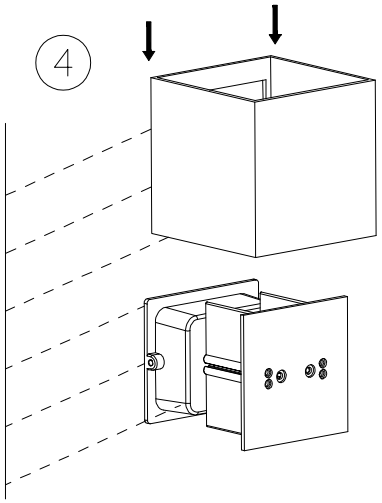

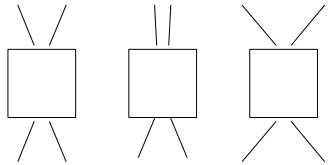

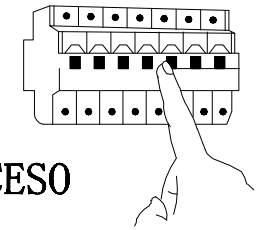

3 YEARS WARRANTY BENEITO FAURE LED

ALUMINIUM

IP65

EMC

CO2

100% 1s

NOT DIMMABLE

+40ºC -10ºC

RoHS Compliant

200-240v

30.000h

>80 CRI

Políg. Valldoriolf C/Thomas Edison 4-6
08430 La Roca del Vallés (Barcelona) Spain
Tel.: 00 34 93.568.40.45 www.beneito-faure.com
B-63378673 Made in P.R.C. WEEE DE98004440